KS423MB,C,PB,ORB,PN,SB,SN
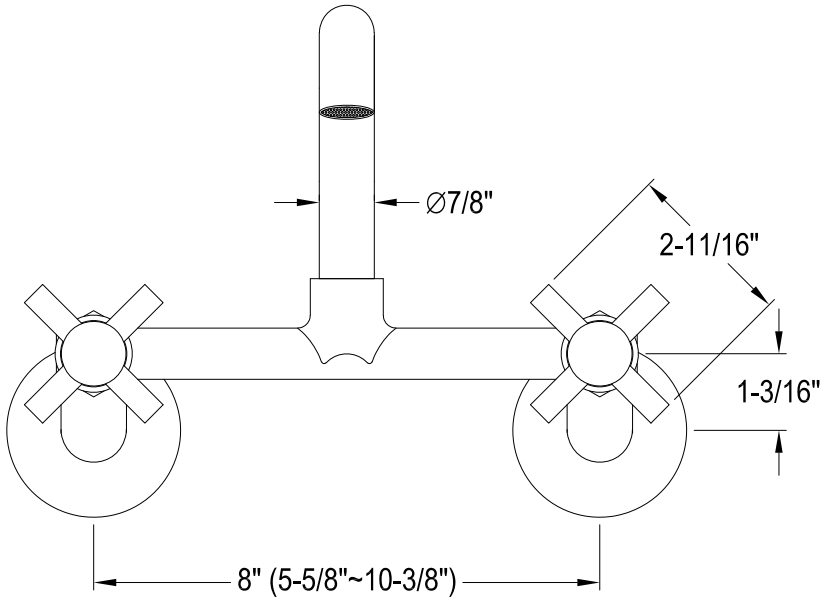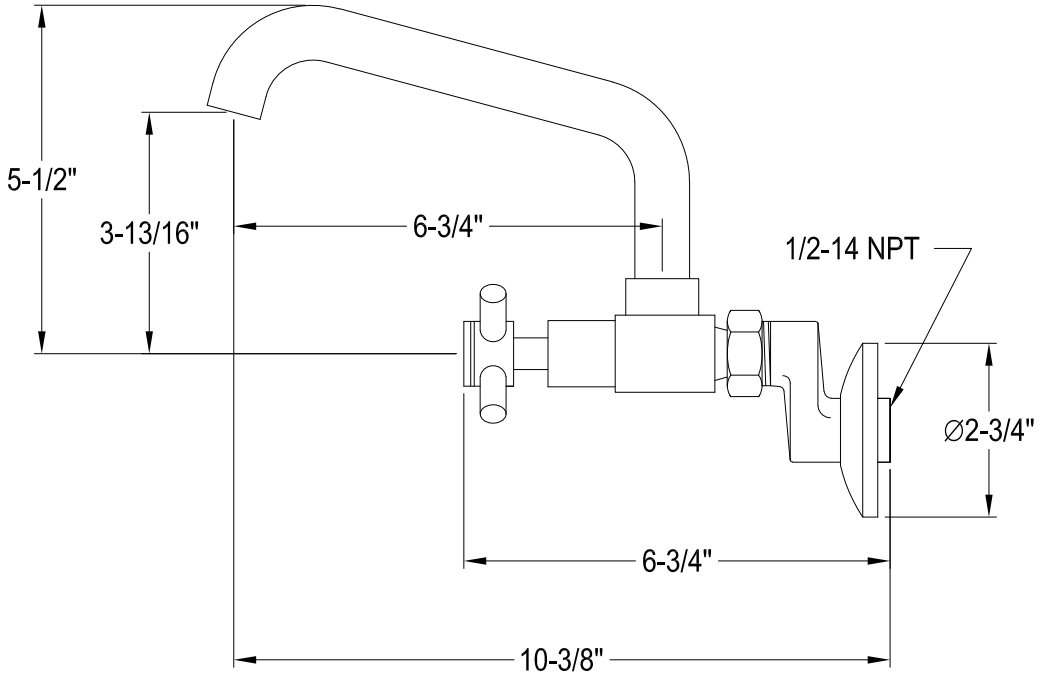
Twin Handles Wall Mount Kitchen Faucet